REVISIONS		
REV	DESCRIPTION	APPROVED
A1	PRELIMINARY	

Initial sample received 5/14/2019 Weight 3.4 oz / ft = 0.2125 lb / ft
Spec = .2221 lb / ft - Sample is 4% under weight.

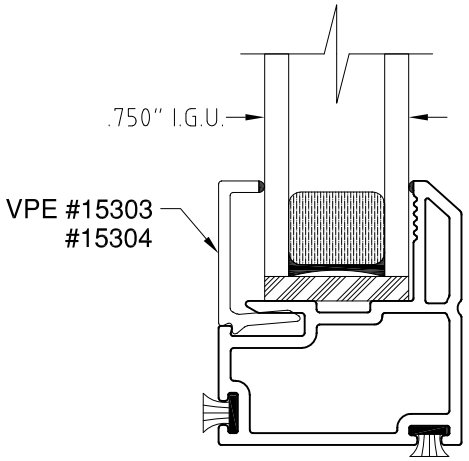

TYPICAL ASSEMBLY DETAIL
(SCALE 1:1)

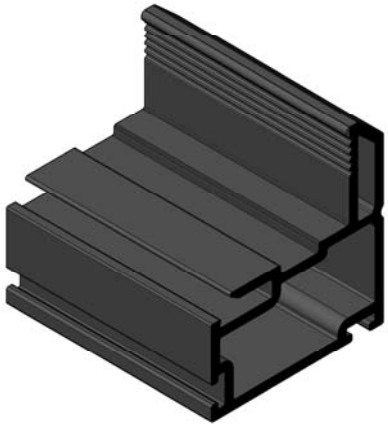

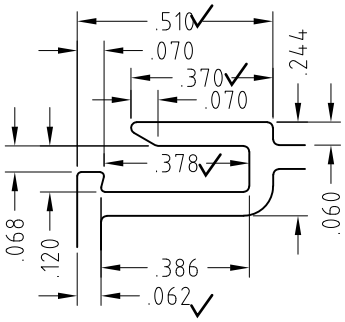

DETAIL "A" (SCALE 2:1)

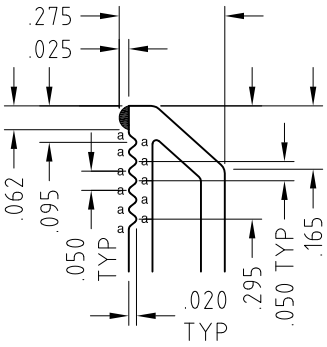

DETAIL "B" (SCALE 2:1)

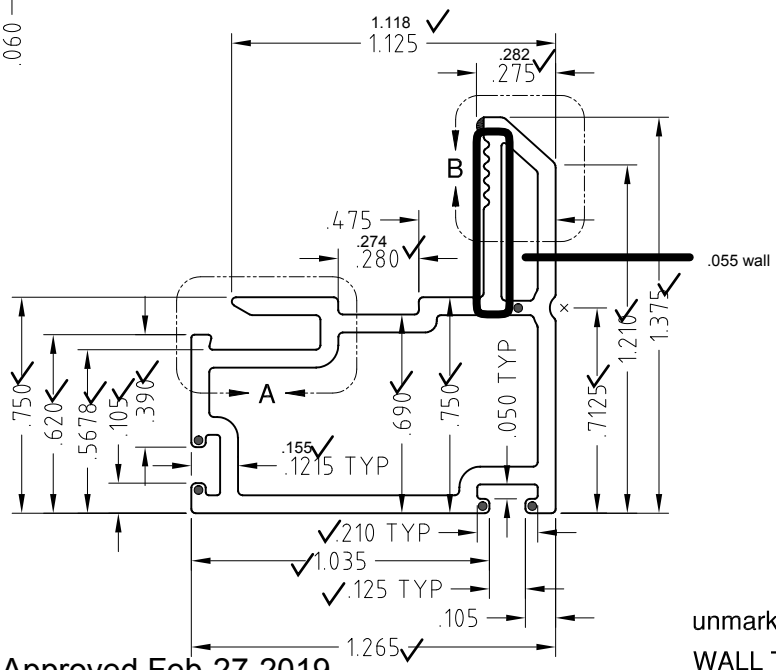

Approved Feb-27-2019
M. E. K.

RADII:
a = 0.010"
b = 0.020"
c = 0.030"
d = 0.040"
e = 0.050"
f = full
unmarked = 0.015"

WALL THICKNESS:
NOMINAL = 0.062"
● = 0.050"

VISION™ PROFILE
EXTRUSIONS

This document and the information contained is owned by and proprietary to Vision Profile Extrusions Limited. By receipt hereof, the holder agrees not to use the information, disclose it to any third parties nor reproduce this document without the prior written consent of Vision Profile Extrusions Limited, and agrees to return this document forthwith upon request.

TOLERANCES
X.XX ± 0.015
X.XXX ± 0.010
X.XXXX ± 0.005
DO NOT SCALE DRAWING
ALL DIMENSIONS ARE IN INCHES U.O.S.

CUSTOMER: VISION PROFILE EXTRUSIONS

PART: D.H.D.S. COMMON SASH

SIZE:	COLOUR:	MATERIAL:	AREA:	TOOL NO.:	DATE:
"A"	VARIOUS	RIGID PVC	0.354 in^2	15299	25-02-2019
SHEET:	DRAWN BY:	SCALE:	VOLUME:	PART NO.:	DWG NO.:
1 of 1	T.C.	3 : 2	0.000 in^3	15299	E814HS06